Hanwha Vision

Network Fisheye

XNF-9013RV

12MP AI IR Fisheye Camera

Key Features

- AI technology
- Classified object type: Person/Face/Vehicle/License plate
- Support Detection Shot
- Object detection-Virtual line (Crossing/Direction), Virtual area (Loitering/Intrusion/Enter/Exit)
- Stereographic type fisheye lens
- Improved image quality
- extreme WDR (2MP@60fps) by scene Analysis and Local contrast enhancement
- WiseNR II , Auto prefer shutter control based on AI
- Resolution/Framerate
- Original view-Max.30fps/25fps@3008x3008 (60Hz/50Hz)
- Double panorama-Max.30fps/25fps@3584x1792 (60Hz/50Hz)
- Single panorama-Max.30fps/25fps@3584x896 (60Hz/50Hz)
- WiseStreamIII based on AI
- Next level cybersecurity
- Device Certificate (Root CA, pre-installed)
- TPM 2.0 (FIPS 140-2 certified), Secure OS/boot/storage, Verified FW forgery
- Adjustable IR distance with WisePower : PoE+mode-13m, PoE mode-8m
- Mirco SD/SDHC/SDXC 2 slot: Max. 1TB (512GBx2ea)
- Reinforced durability
- IP66, NEMA4X, IK10, Metal shielded RJ-45
- Hard-coated dome bubble
- Additional accessories
- Black Skin Cover (SBC-160BF), Tilted wall mount (SBP-160TMW1)

Compatible Devices

SBC-160BF

SBP-160HMW1

SBV-180BW

SBV-180WW

SBP-150CMI

SBP-300CMI

SBP-300CMW1

SBP-900CMW

SBP-300CMTW

SBP-300CMTS

SBP-300WMW

SBP-300WMW1

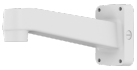

SBP-390WMW2

SBP-160WMW1

Design and specifications are subject to change without notice. The latest product information / specification can be found at HanwhaVision.com.
Hanwha Vision is formerly known as Hanwha Techwin.

© Hanwha Vision CO., LTD. All rights reserved.

XNF-9013RV

12MP AI IR Fisheye Camera

Specifications

Video	
Imaging Device	1/2.3" CMOS
Resolution	Original view(1:1): 3008x3008~480x480 Double panorama(2:1): 3584x1792~640x320 Single panorama(4:1): 3584x896~640x160 Quad view: 3584x2688~640x480 Q1/Q2/Q3/Q4(4:3): 1792x1344~640x480
Max. Framerate	H.265/H.264: Original view-Max. 30fps/25fps@3008x3008(60Hz/50Hz), Double panorama-Max. 30fps/25fps@3584x1792(60Hz/50Hz) Single panorama-Max. 30fps/25fps@3584x896(60Hz/50Hz) MJPEG: Max. 30fps(@9MP Max. 5fps)
Min. Illumination	Color: 0.39Lux(F2.2, 1/30sec, 30IRE) BW: 0.039Lux(F2.2, 1/30sec, 30IRE), 0Lux(IR LED on)
Video Out	CVBS: 1.0 Vp-p / 75Ω composite, 720x480(N), 720x576(P), for Installation USB: Micro USB Type B, 1280x720 for installation

Lens	
Focal Length (Zoom Ratio)	1.08mm fixed focal
Max. Aperture Ratio	F2.2
Angular Field of View	H: 187° / V: 187° / D: 187°
Min. Object Distance	0.5m(1.64ft)
Focus Control	Simple focus
Lens Type	Fixed iris(IR corrected)

Pan / Tilt / Rotate	
Pan / Tilt / Rotate Range	Lens rotation

Operational	
Camera Title	Displayed up to 85 characters
Day & Night	Auto(ICR)
Backlight Compensation	BLC, HLC, WDR, SSDR
Wide Dynamic Range	extremeWDR(120dB)
Digital Noise Reduction	WiseNR II (Based on AI engine), SSNR V
Motion Detection	8ea, 8point Polygonal zones
Privacy Masking	32ea, 4point Quadrangle zones - Color: Gray/Green/Red/Blue/Black/White - Mosaic
Gain Control	Off / Max Gain / Manual
White Balance	ATW / NarrowATW / AWC / Manual / Indoor / Outdoor
Electronic Shutter Speed	Minimum / Maximum / Anti flicker(1/5~1/12,000sec) Prefer shutter control(Based on AI engine)
Video Rotation	Flip, Mirror

Design and specifications are subject to change without notice. The latest product information / specification can be found at HanwhaVision.com.
Hanwha Vision is formerly known as Hanwha Techwin.

© Hanwha Vision CO., LTD. All rights reserved.

Analytics	Classified object type: Person/Face/Vehicle(Type: car/bus/truck/motorcycle/bicycle)/License plate Attributes: Vehicle(Type: car/bus/truck/motorcycle/bicycle) Support DetectionShot Analytics events based on AI engine - Object detection, Virtual line(Crossing/Direction), Virtual area(Loitering/Intrusion/Enter/Exit), Motion detection Analytics events - Defocus detection, Tampering, Fog detection, Audio detection, Sound classification, Virtual area(Appear/Disappear)
Business Intelligence	Based on AI engine: People/Vehicle counting, Queue management, Heatmap
Alarm I/O	2 configurable I/O ports
Alarm Triggers	Analytics, Network disconnect, Alarm input, App event, Time schedule, MQTT subscription
Alarm Events	When alarm trigger occurred - File upload(image): e-mail/FTP/SFTP - File upload(video clip): FTP/SFTP - Notification: e-mail - Recording: SD/SDHC/SDXC or NAS recording at event triggers - Alarm output - Handover: PTZ preset, send message by HTTP/HTTPS/TCP - Audio clip playback - MQTT: publication
Audio In	Selectable(mic in/line in/built-in mic)
Audio Out	Line out
Light Type	IR LED(850nm)
IR Viewable Length	WiseIR, PoE: 8m(26.25ft), PoE+: 13m(42.65ft)

Network	
Ethernet	Metal shielded RJ-45(10/100BASE-T)
Video Compression	H.265/H.264: Main/Baseline/High, MJPEG
Audio Compression	G.711 u-law /G.726 Selectable G.726(ADPCM) 8KHz, G.711 8KHz G.726: 16Kbps, 24Kbps, 32Kbps, 40Kbps AAC-LC: 48Kbps at 16KHz
Smart Codec	Manual(5ea area), WiseStreamIII(Based on AI engine)
Video Quality Adjustment	H.264/H.265: Target bitrate level control MJPEG: Target bitrate level control
Bitrate Control	H.264/H.265: CBR or VBR MJPEG: VBR
Streaming	Unicast(20 users) / Multicast Multiple streaming(Up to 10 profiles, 5 virtual channel support)
Protocol	IPv4, IPv6, TCP/IP, UDP/IP, RTP(UDP), RTP(TCP), RTCP, RTSP, NTP, HTTP, HTTPS, SSL/TLS, DHCP, FTP/SFTP, SMTP, ICMP, IGMP, SNMPv1/v2c/v3(MIB-2), ARP, DNS, DDNS, QoS, UPnP, Bonjour, LLDP, CDP, SRTP(TCP, UDP Unicast), MQTT
Application Programming Interface	ONVIF Profile S/G/T/M SUNAPI(HTTP API) Wisenet open platform

Security	
OS / Firmware Protect	Encrypted Firmware, Secure boot, Signed Firmware
User authentication	Digest Authenticaton, Prevent brute-force attacks
Network authentication	IEEE 802.1X(EAP-TLS, EAP-LEAP, EAP-PEAP, MSCHAPv2)
Secure Communication	HTTPS, WSS(WebSocket Secure), SRTP
Access Control	IP-based access control
Data Protect	Encryption Credentials, Encrypt compress for live recording file export
Audit	Access / System / Event Log management
Device ID	Device certificate(Hanwha Vision Root CA)
Secure Storage	TPM(Trusted platform module), SDcard partition encrypt(AES-256)
Security Certificate	TPM with FIPS 140-2 level 2

Design and specifications are subject to change without notice. The latest product information / specification can be found at HanwhaVision.com.
Hanwha Vision is formerly known as Hanwha Techwin.

© Hanwha Vision CO., LTD. All rights reserved.

General	
Webpage Language	English, Korean, Chinese, French, Italian, Spanish, German, Japanese, Russian, Portuguese, Czech, Polish, Turkish, Dutch, Hungarian, Greek
Edge Storage	Micro SD/SDHC/SDXC 2slot Max. 1TB(512GBx2)
Memory	4GB RAM, 512MB Flash

Environmental & Electrical	
Operating Temperature / Humidity	-40°C~+60°C(-40°F~+140°F) / 0~95% RH(non-condensing)
Storage Temperature / Humidity	-50°C~+60°C(-58°F~+140°F) / 0~90% RH
Certification	IP66, NEMA4X, IK10
Input Voltage	WisePower(PoE(IEEE802.3af, class3)/PoE+(IEEE802.3at type2, Class4)), 12VDC
Power Consumption	PoE: Max 12.95W, typical 9.4W, 12VDC: Max 12.9W, typical 9.0W PoE+: Max 23.0W, typical 9.4W, 12VDC: Max 22.0W, typical 9.0W

Mechanical	
Color / Material	White / Aluminum Bubble: Hard-coated dome
RAL Code	RAL9003
Product Dimensions / Weight	ø160x72mm(ø6.30x2.83"), 1170g(2.58 lb)
Compatible Conduit hole / Gangbox	single, double, 4" octagon, 4" square
Hanging Mount (Dome)	SBP-160HMW1
Skin Cover	SBC-160BF
Backbox	SBV-180BW/180WW
Ceiling Mount (Assy)	SBP-150CMI/300CMI, SBP-300CMW1/900CMW, SBP-300CMTW, SBP-300CMTS
Wall Mount	SBP-300WMW/300WMW1, SBP-390WMW2, SBP-160WMW1
Pole Mount	SBD-180PMW/300PMW2
In-ceiling Mount	SHD-1600FPW/1600FW
Parapet Mount	SBP-300LMW, SBP-156LMW1
Corner Mount	SBP-300KMW1
Tilt Mount	SBP-160TMW1
Cabinet	SBP-300NBW

Certifications & Standards	
EMC	FCC 47 CFR 15 Subpart B Class A ICES-3(A)/NMB-3(A) CE/UKCA - EN 55032 Class A, EN 50130-4, EN 61000-3-2, EN 61000-3-3 VCCI CISPR 32 Class A RCM AS/NZS CISPR 32 Class A KS C 9832 Class A , KS C 9835
Safety	UL 62368-1, CAN/CSA C22.2 NO. 62368-1 IEC 62471
Environment	EN IEC 63000 IEC 60529 IP66, IEC 62262 IK10 NEMA 250 type 4X

DORI (EN62676-4 standard)	
Detect (25PPM/ 8PPF)	34.9m(114.49ft)
Observe (63PPM/ 19PPF)	13.9m(45.60ft)
Recognize (125PPM/ 38PPF)	7.0m(22.96ft)
Identify (250PPM/ 76PPF)	3.5m(11.48ft)

Design and specifications are subject to change without notice. The latest product information / specification can be found at HanwhaVision.com.
Hanwha Vision is formerly known as Hanwha Techwin.

© Hanwha Vision CO., LTD. All rights reserved.

XNF-9013RV

12MP AI IR Fisheye Camera

CAD

Unit:mm [inch]

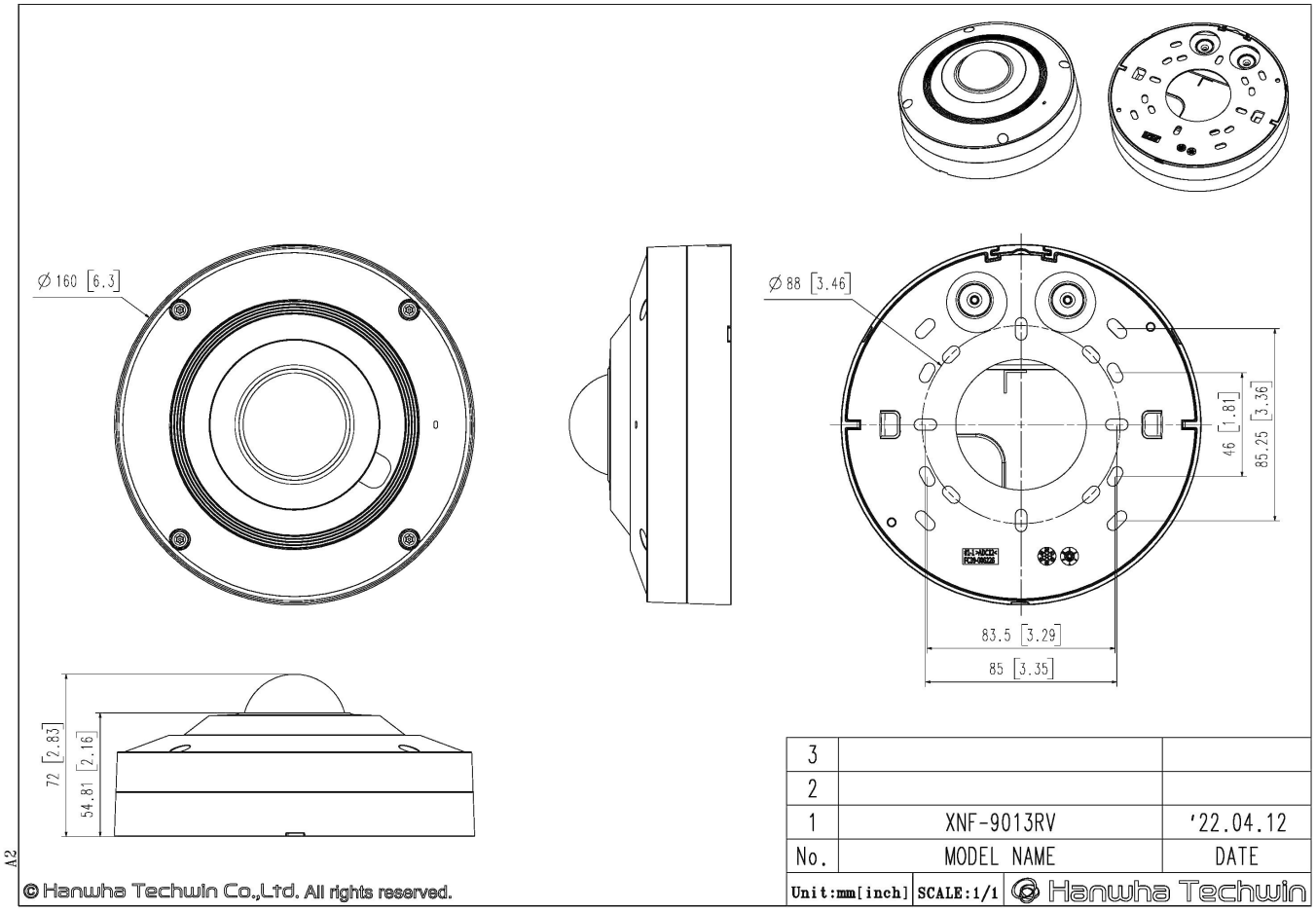

Design and specifications are subject to change without notice. The latest product information / specification can be found at HanwhaVision.com.
Hanwha Vision is formerly known as Hanwha Techwin.

© Hanwha Vision CO., LTD. All rights reserved.